EGQ-PUSH Exhaust egg crate grille 13x13 mm with filter



Description

Exhaust egg crate grille 13x13 mm for false ceiling with double frame and hinge opening and push-pull system for easy filter installation and replacement.

Characteristics

Material: aluminium.
Finish: natural anodised.
Fastening: with visible screws.
Filter: COARSE class (G2) thickness 12 mm.
Opening/closing: with push-pull system.

Installation

Installation is carried out by securing the external frame of the grille to the wall using screws or, for installation on modular 600x600 false ceilings, resting on the metal structure in place of the panel.

Use

Grille for external or indoor air exhaust where dust pre-filtration is recommended.
Initial pressure drop lower than 40 Pa with 1.5 m/s speed on the filter.

Accessories

- EPZ galvanised plenum;
- EPI insulated plenum.

On request

Closing with screw or magnet;
white RAL 9016 painting or other RAL colours;
special dimensions.

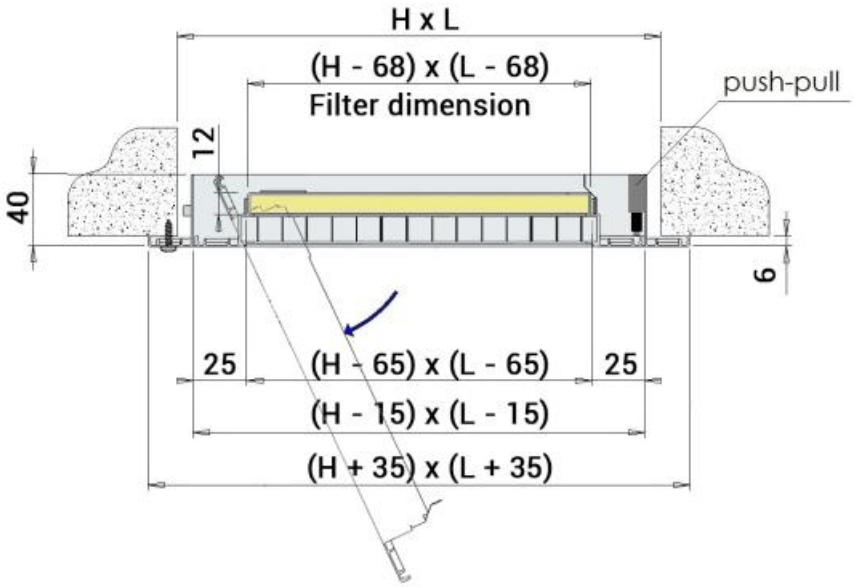

Effective cross-section

H	L						
	200	300	400	500	600	800	1000
	effective cross-section of the grille m^2						
200	0,018	0,031	0,045	0,058	0,071	0,098	0,124
300	0,031	0,054	0,078	0,101	0,124	0,170	0,217
400	0,045	0,078	0,111	0,144	0,177	0,243	0,309
500	0,058	0,101	0,144	0,187	0,230	0,315	0,401
600	0,071	0,124	0,177	0,230	0,282	0,388	0,493

Operating data

m^3/h: flow rate
Pa: pressure drops in Pascal
dB(A): noise level

An air velocity on the filter of 1.5 m/s is recommended to contain pressure drops and maintain filtration efficiency;
the flow rate data in the table refers to the grille with the filter.

All dimensions are expressed in mm.

H	V m/s	L						
		200	300	400	500	600	800	1000
	Face velocity on the filter	flow rate m^3/h						
200	1,5	63	121	180	238	296	413	530
	2	84	162	240	317	395	551	706
300	1,5	121	234	346	458	571	795	1020
	2	162	312	461	611	761	1060	1360
400	1,5	180	346	512	679	845	1178	1510
	2	240	461	683	905	1127	1570	2014
500	1,5	238	458	679	899	1119	1560	2000
	2	317	611	905	1199	1492	2080	2667
600	1,5	296	571	845	1119	1394	1942	2491
	2	395	761	1127	1492	1858	2590	3321

Operating data for the version for suspended ceilings

model	external frame size	effective section of the grid	effective filter section	Front speed on the filter	air flow rate
	mm	m^2	m^2	m/s	m^3/h
EGQ-PUSH	595x595	0,229	0,218	1,5	1180
				2	1570

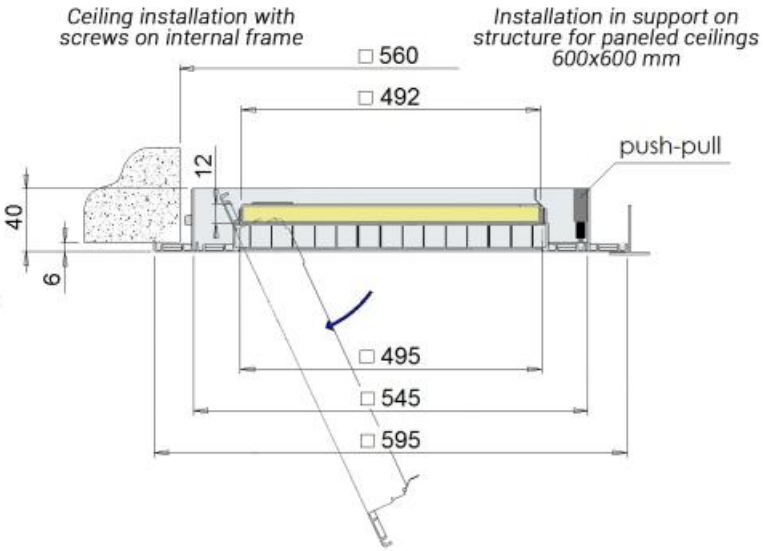

Noise level dB(A)

V m/s	dB(A)
1,5	<20
2	20/25

Pressure drop (Pa)

V m/s	Pa
1,5	25/30
2	45/50

Plenum

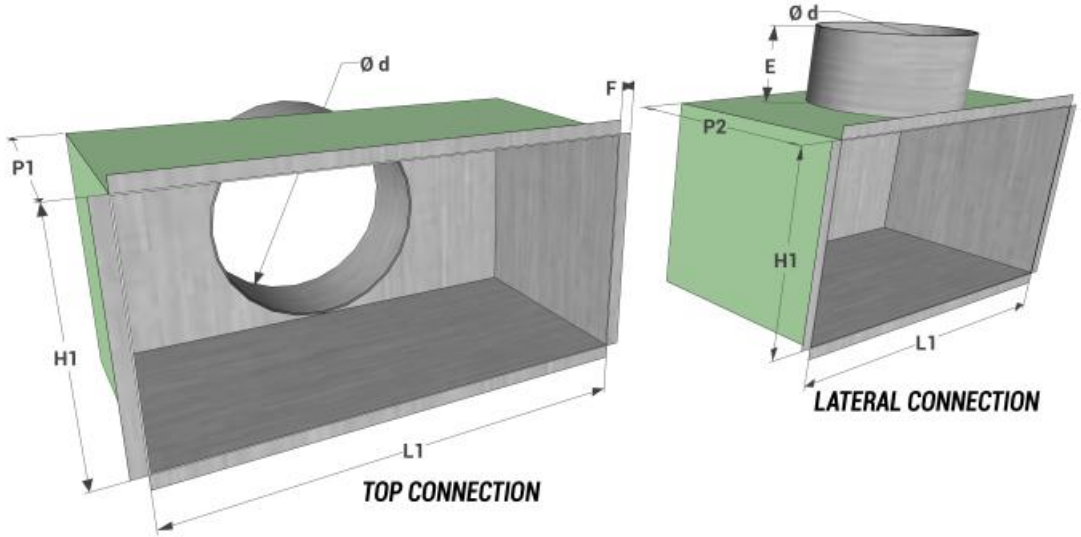

model L1 x H1	top connection			lateral connection			E	F	model L1 x H1	top connection			lateral connection			E	F
	P1	no. connections	Ø d	P2	no. connections	Ø d				P1	no. connections	Ø d	P2	no. connections	Ø d		
200x200	200	1	198	300	1	198	80	12	500x300	200	1	248	350	1	248	80	12
300x200	200	1	198	300	1	198	80	12	600x300	200	2	198	350	2	248	80	12
400x200	200	1	198	300	1	198	80	12	800x300	200	2	248	350	2	248	80	12
500x200	200	1	198	300	1	198	80	12	1000x300	200	2	248	350	2	248	80	12
600x200	200	2	198	300	2	198	80	12	400x400	200	1	298	350	1	298	80	12
800x200	200	2	198	300	2	198	80	12	500x400	200	1	298	350	1	298	80	12
1000x200	200	2	198	300	2	198	80	12	600x400	200	2	198	350	2	248	80	12
300x300	200	1	248	350	1	248	80	12	800x400	200	2	298	350	2	298	80	12
400x300	200	1	248	350	1	248	80	12	1000x400	200	2	298	400	2	298	80	12

Plenum for grille version for square false ceiling

All dimensions are espressed in mm.

model L1 x H1	lateral connection			E	F
	P2	no. connections	Ø d		
560x560	300	1	250	80	12

Price list

Painted white RAL 9016 + 20%

H	L						
	200	300	400	500	600	800	1000
	euro	euro	euro	euro	euro	euro	euro
200	⌄	⌄	⌄	⌄	⌄	⌄	⌄
300	⌄	⌄	⌄	⌄	⌄	⌄	⌄
400	⌄	⌄	⌄	⌄	⌄	⌄	⌄
500	⌄	⌄	⌄	⌄	⌄	⌄	⌄
600	⌄	⌄	⌄	⌄	⌄	⌄	⌄

Price list for grille version for square false ceiling

White painted RAL 9016 + 20%

model	external frame dimensions	euro
	mm	
EGQ-PUSH	595x595	⌄

Plenum

dimensions	top connection		lateral connection	
	EPZ galvanized plenum	EPI isolated plenum	EPZ galvanized plenum	EPI isolated plenum
L1xH1	**euro**	**euro**	**euro**	**euro**
200x200	⌄	⌄	⌄	⌄
300x200	⌄	⌄	⌄	⌄
400x200	⌄	⌄	⌄	⌄
500x200	⌄	⌄	⌄	⌄
600x200	⌄	⌄	⌄	⌄
800x200	⌄	⌄	⌄	⌄
1000x200	⌄	⌄	⌄	⌄
300x300	⌄	⌄	⌄	⌄
400x300	⌄	⌄	⌄	⌄
500x300	⌄	⌄	⌄	⌄
600x300	⌄	⌄	⌄	⌄
800x300	⌄	⌄	⌄	⌄
1000x300	⌄	⌄	⌄	⌄
400x400	⌄	⌄	⌄	⌄
500x400	⌄	⌄	⌄	⌄
600x400	⌄	⌄	⌄	⌄
800x400	⌄	⌄	⌄	⌄
1000x400	⌄	⌄	⌄	⌄

Plenum for grille version for square false ceiling

dimensions	lateral connection	
	EPZ galvanized plenum	EPI isolated plenum
L1xH1	**euro**	**euro**
560x560	⌄	⌄