EGF-PUSH Perforated grille with filter



Description

Exhaust grille with perforated panel, with double frame and hinge opening and push-pull system for easy filter installation and replacement.

Characteristics

Aluminium perimeter frame.
Galvanised steel panel.
Finish: painted white RAL9016.
Filter: COARSE class (G2) thickness 12 mm.
Opening/closing: with push-pull system.

The perforated mesh is made according to the following specifications:
-60° alternating round holes;
-empty/full ratio 46%;
-diameter of holes 5mm;
-distance between centres 7mm.

Installation

Installation is carried out by securing the external frame of the grille to the wall using screws.

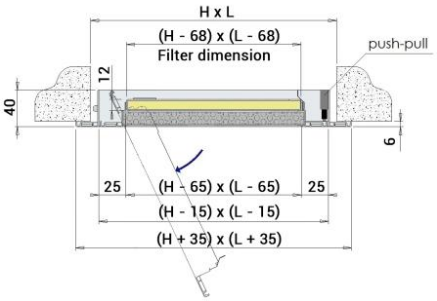

Use

Grille for air exhaust in rooms where pre-filtration is recommended.
Initial pressure drop lower than 40 Pa with 1.5 m/s speed on the filter.

Accessories

- EPZ galvanised plenum;
- EPI insulated plenum.

On request

Closing with screw or magnet.

Effective cross-section

L: width
H: height
All measurements are expressed in mm

H	L						
	200	300	400	500	600	800	1000
	effective cross-section of the grille m²						
200	0,008	0,015	0,021	0,027	0,033	0,046	0,058
300	0,015	0,025	0,036	0,047	0,058	0,079	0,101
400	0,021	0,036	0,052	0,067	0,082	0,113	0,144
500	0,027	0,047	0,067	0,087	0,107	0,147	0,187
600	0,033	0,058	0,082	0,107	0,132	0,181	0,230

Operating data

An air velocity on the filter of 1.5 m/s is recommended to contain pressure drops and maintain filtration efficiency;
the flow rate data in the table refers to the grille with the filter.

H	V m/s	L						
		200	300	400	500	600	800	1000
	Face velocity on the filter	flow rate m³/h						
200	1,5	63	121	180	238	296	413	530
	2	84	162	240	317	395	551	706
300	1,5	121	234	346	458	571	795	1020
	2	162	312	461	611	761	1060	1360
400	1,5	180	346	512	679	845	1178	1510
	2	240	461	683	905	1127	1570	2014
500	1,5	238	458	679	899	1119	1560	2000
	2	317	611	905	1199	1492	2080	2667
600	1,5	296	571	845	1119	1394	1942	2491
	2	395	761	1127	1492	1858	2590	3321
800	1,5	413	795	1178	2560	1942	2707	3471
	2	551	1060	1570	2080	2590	3609	4629
1000	1,5	530	1020	1510	2000	2491	3471	4452
	2	706	1360	2014	2667	3321	4629	5936

Noise level dB(A)

V m/s	dB(A)
1,5	<20
2	20/25

Pressure drop (Pa)

V m/s	Pa
1,5	25/30
2	45/50

Plenum

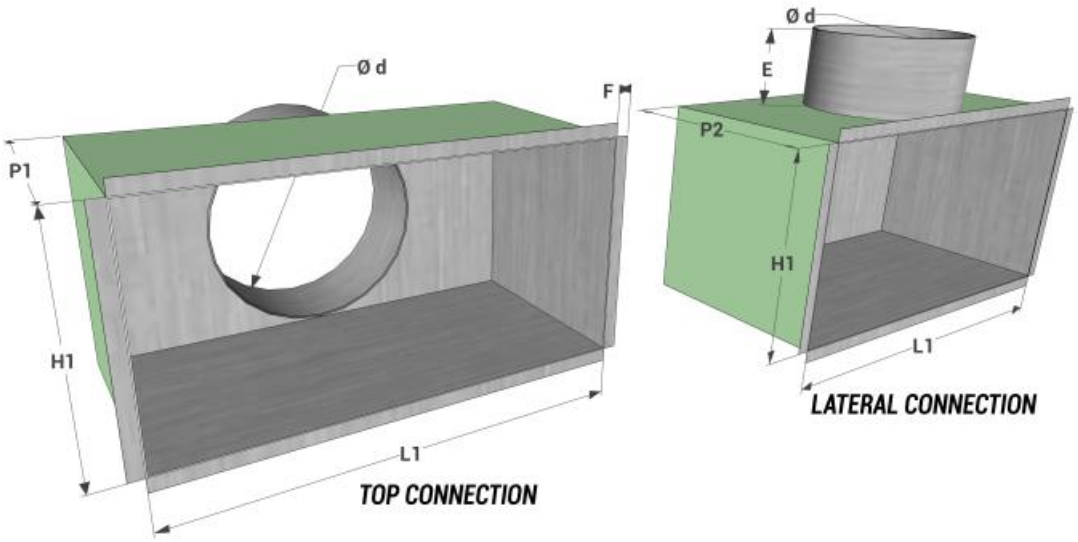

All measurements are expressed in mm.

model L1 x H1	top connection			lateral connection			E	F	model L1 x H1	top connection			lateral connection			E	F
	P1	no. connections	Ø d	P2	no. connections	Ø d				P1	no. connections	Ø d	P2	no. connections	Ø d		
200x200	200	1	198	300	1	198	80	12	500x300	200	1	248	350	1	248	80	12
300x200	200	1	198	300	1	198	80	12	600x300	200	2	198	350	2	248	80	12
400x200	200	1	198	300	1	198	80	12	800x300	200	2	248	350	2	248	80	12
500x200	200	1	198	300	1	198	80	12	1000x300	200	2	248	350	2	248	80	12
600x200	200	2	198	300	2	198	80	12	400x400	200	1	298	350	1	298	80	12
800x200	200	2	198	300	2	198	80	12	500x400	200	1	298	350	1	298	80	12
1000x200	200	2	198	300	2	198	80	12	600x400	200	2	198	350	2	248	80	12
300x300	200	1	248	350	1	248	80	12	800x400	200	2	298	350	2	298	80	12
400x300	200	1	248	350	1	248	80	12	1000x400	200	2	298	400	2	298	80	12

Price list

H	L								
	200	300	400	500	600	700	800	900	1000
	euro	euro	euro	euro	euro	euro	euro	euro	euro
200	⌄	⌄	⌄	⌄	⌄	⌄	⌄	⌄	⌄
300	⌄	⌄	⌄	⌄	⌄	⌄	⌄	⌄	⌄
400	⌄	⌄	⌄	⌄	⌄	⌄	⌄	⌄	⌄
500	⌄	⌄	⌄	⌄	⌄	⌄	⌄	⌄	⌄
600	⌄	⌄	⌄	⌄	⌄	⌄	⌄	⌄	⌄

Plenum

dimensions	top connection		lateral connection	
	EPZ galvanized plenum	EPI isolated plenum	EPZ galvanized plenum	EPI isolated plenum
L1xH1	**euro**	**euro**	**euro**	**euro**
200x200	⌄	⌄	⌄	⌄
300x200	⌄	⌄	⌄	⌄
400x200	⌄	⌄	⌄	⌄
500x200	⌄	⌄	⌄	⌄
600x200	⌄	⌄	⌄	⌄
800x200	⌄	⌄	⌄	⌄
1000x200	⌄	⌄	⌄	⌄
300x300	⌄	⌄	⌄	⌄
400x300	⌄	⌄	⌄	⌄
500x300	⌄	⌄	⌄	⌄
600x300	⌄	⌄	⌄	⌄
800x300	⌄	⌄	⌄	⌄
1000x300	⌄	⌄	⌄	⌄
400x400	⌄	⌄	⌄	⌄
500x400	⌄	⌄	⌄	⌄
600x400	⌄	⌄	⌄	⌄
800x400	⌄	⌄	⌄	⌄
1000x400	⌄	⌄	⌄	⌄