CT Counter-frame for air jets and grilles



Description

Galvanised steel counter-frames for air jets and grilles.
The counter-frames are equipped with special brackets that are bent during installation to anchor them to the walls.

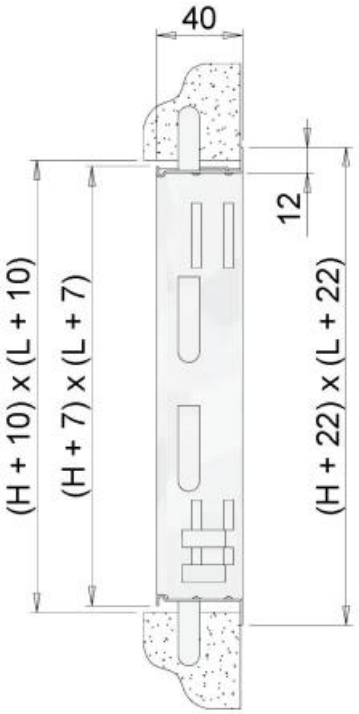

Use

Accessory compatible with EDC series diffusers, EBA - EBV - EBL series air jets and EGA - EGQ - EGF series grilles.

Notes

The frame is supplied disassembled and must be assembled on site.

Assembly detail:

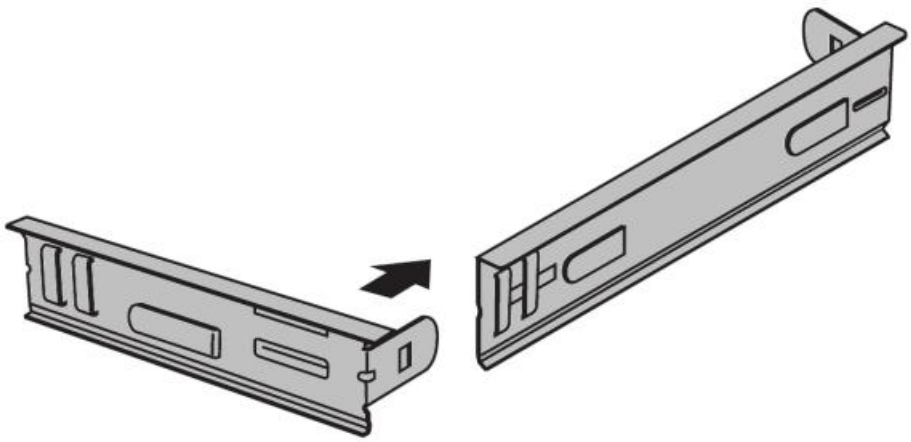

Price list

CT counter-frame										
H	L									
	200	300	400	500	600	700	800	900	1000	1200
	euro	euro	euro	euro	euro	euro	euro	euro	euro	euro
100	⌄	⌄	⌄	⌄	⌄	⌄	⌄	⌄	⌄	⌄
150	⌄	⌄	⌄	⌄	⌄	⌄	⌄	⌄	⌄	⌄
200	⌄	⌄	⌄	⌄	⌄	⌄	⌄	⌄	⌄	⌄
300	⌄	⌄	⌄	⌄	⌄	⌄	⌄	⌄	⌄	⌄
400	⌄	⌄	⌄	⌄	⌄	⌄	⌄	⌄	⌄	⌄
500	⌄	⌄	⌄	⌄	⌄	⌄	⌄	⌄	⌄	⌄
600	⌄	⌄	⌄	⌄	⌄	⌄	⌄	⌄	⌄	⌄
800	⌄	⌄	⌄	⌄	⌄	⌄	⌄	⌄	⌄	⌄
1000	⌄	⌄	⌄	⌄	⌄	artDG03009005	⌄	⌄	⌄	⌄