EGFR-PUSH Perforated grille with filter and internal frame 15 mm



Description

Exhaust grille with perforated panel, with double frame (15 mm internal) and hinge opening and push-pull system for easy filter installation and replacement.

Characteristics

Aluminium perimeter frame.
Galvanised steel panel.
Finish: painted white RAL9016.
Installation: resting on false ceiling structure.
Filter: COARSE class (G2) thickness 10 mm.
Opening/closing: with push-pull system.

The perforated mesh is made according to the following specifications:
-60° alternating round holes;
-empty/full ratio 46%;
-diameter of holes 5mm;
-distance between centres 7mm.

Use

Grille for air exhaust in rooms where pre-filtration is recommended.
Initial pressure drop lower than 40Pa with 1.5 m/s speed on the filter.

On request

Painting in different RAL colours.

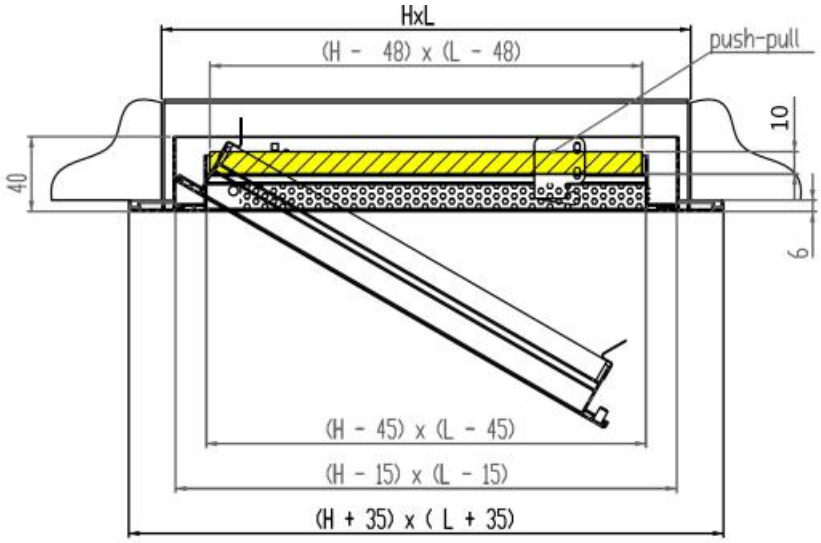

Operating data

An air velocity on the filter of 1.5 m/s is recommended to contain pressure drops and maintain filtration efficiency;
the flow rate data in the table refers to the grille with the filter.
All measurements are expressed in mm

model	external frame dimensions	effective cross-section of the filter	face velocity on the filter	air flow rate
	mm	m^2	m/s	m^3/h
EGFR-PUSH	595x595	0,238	1,5	1285
			2	1713

Noise level dB(A)

V m/s	dB(A)
1,5	<20
2	20/25

Pressure drop (Pa)

V m/s	Pa
1,5	25/30
2	45/50

Plenum

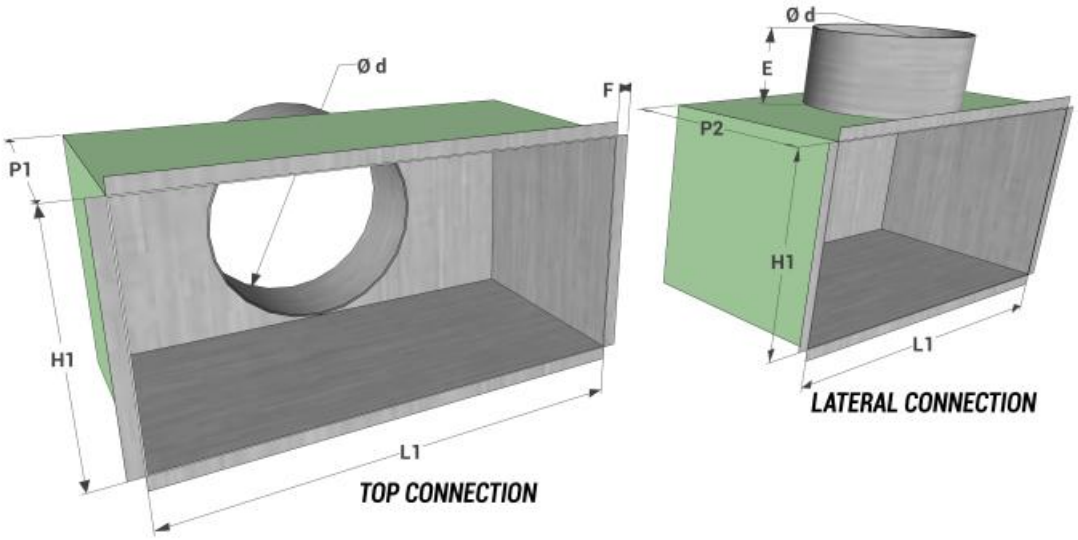

model L1 x H1	lateral connection			E	F
	P2	no. connections	Ø d		
560x560	300	1	250	80	12

Price list

model	external frame dimensions mm	euro
EGFR-PUSH	595x595	⌄

Plenum

dimensions	lateral connection	
	EPZ galvanized plenum	EPI isolated plenum
L1xH1	**euro**	**euro**
560x560	⌄	⌄