EGQR-PUSH Exhaust egg crate grille 13x13 mm with filter and internal frame 15 mm



Description

Exhaust egg crate grille 13x13 mm for false ceiling, with double frame (internal 15 mm) and hinge opening and push-pull system for easy filter installation and replacement.

Characteristics

Material: aluminium.
Finish: natural anodised.
Filter: COARSE class (G2) thickness 10 mm.
Opening/closing: with push-pull system.

Installation

Installation is carried out by securing the external frame of the grille to the wall using screws or resting on the structure for 600x600 mm panel false ceilings.

Use

For external or indoor air exhaust where dust pre-filtration is recommended.
Initial pressure drop lower than 40Pa with 1.5 m/s speed on the filter.

Accessories

- EPZ galvanised plenum;
- EPI insulated plenum.

On request

White RAL 9016 painting or other RAL colours.

Ceiling installation with screw on the external frame

Installation in support on structure for paneled ceilings 600x600 mm

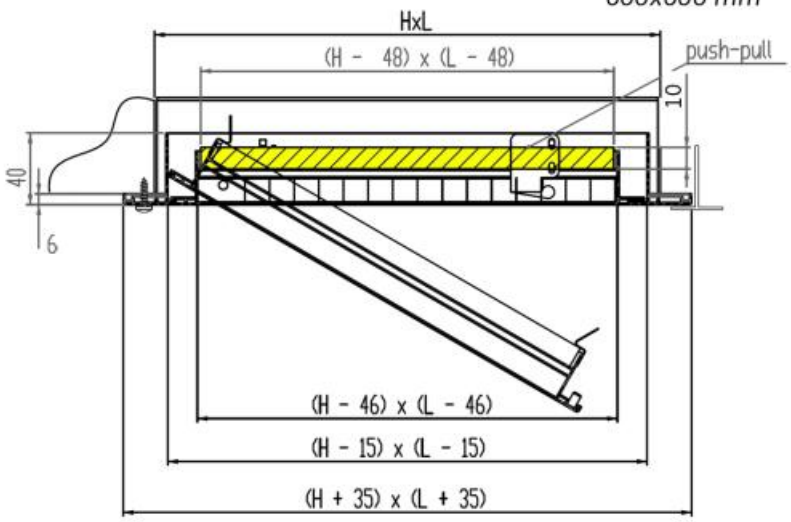

Operating data

m^3/h: flow rate
Pa: pressure drops in Pascal
dB(A): noise level

An air velocity on the filter of 1.5 m/s is recommended to contain pressure drops and maintain filtration efficiency; the flow rate data in the table refers to the grille with the filter.

All dimensions are expressed in mm.

model	external frame size	effective filter section	Front speed on the filter	air flow rate
	mm	m^2	m/s	m^3/h
EGQR-PUSH	595x595	0,238	1,5	1285
			2	1713

Noise level dB(A)

V m/s	dB(A)
1,5	<20
2	20/25

Pressure drop (Pa)

V m/s	Pa
1,5	25/30
2	45/50

Plenum

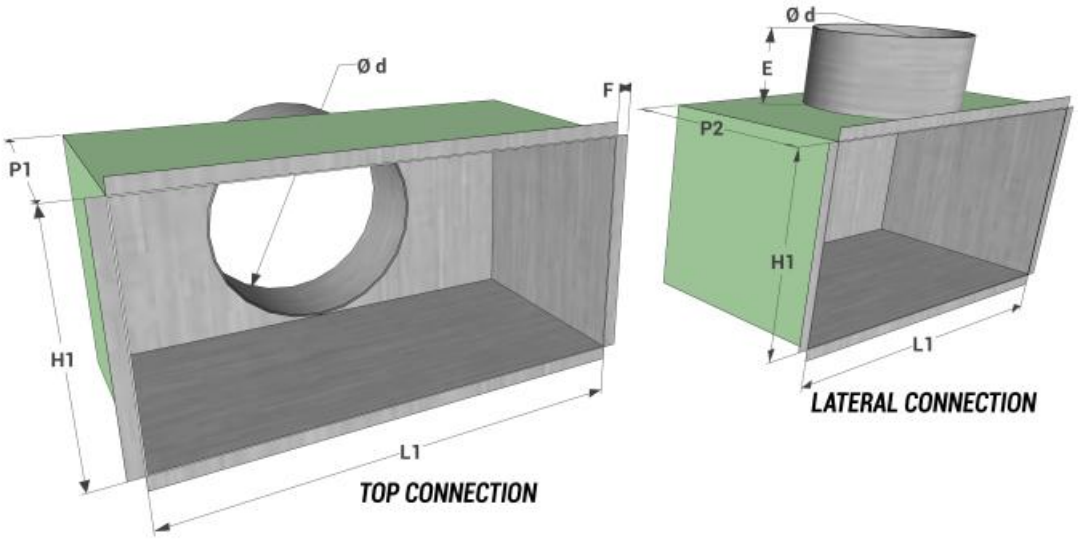

All measurements are expressed in mm

model L1 x H1	lateral connection			E	F
	P2	no. connections	Ø d		
560x560	300	1	250	80	12

Pèrice list

Painted white RAL 9016 + 20%

model	external frame dimensions	euro
	mm	
EGQR-PUSH	595x595	⌄

Plenum

dimensions	lateral connection	
	EPZ galvanized plenum	EPI isolated plenum
L1xH1	**euro**	**euro**
560x560	⌄	⌄