EBL3 20/0° Linear grilles with horizontal fixed bars with filter



Description

Aluminium exhaust grilles with fixed horizontal blades with 0° deflection, with the insertion of a special profile or counter-frame that allows for a flat filter for coarse and fine dust to be housed.

Characteristics

Material: aluminium.
Finish: painted RAL9016.
Filter: COARSE class (G2) thickness 12 mm.

Installation

Installation is carried out by opening the special brackets in the counter-frame or, alternatively, by securing the latter to the wall or duct using screws.

Use

For external or indoor air exhaust where dust pre-filtration is recommended.
Initial pressure drop lower than 40 Pa with 1.5 m/s speed on the filter.

Models

EBL3 20/0°: grille with special counter-frame secured with a hinge to the grille frame to allow for easy filter maintenance. Closing by means of a screw mechanism.

Accessories

- EPZ galvanised plenum;
- EPI insulated plenum.

On request

Fastening with magnet or knob.

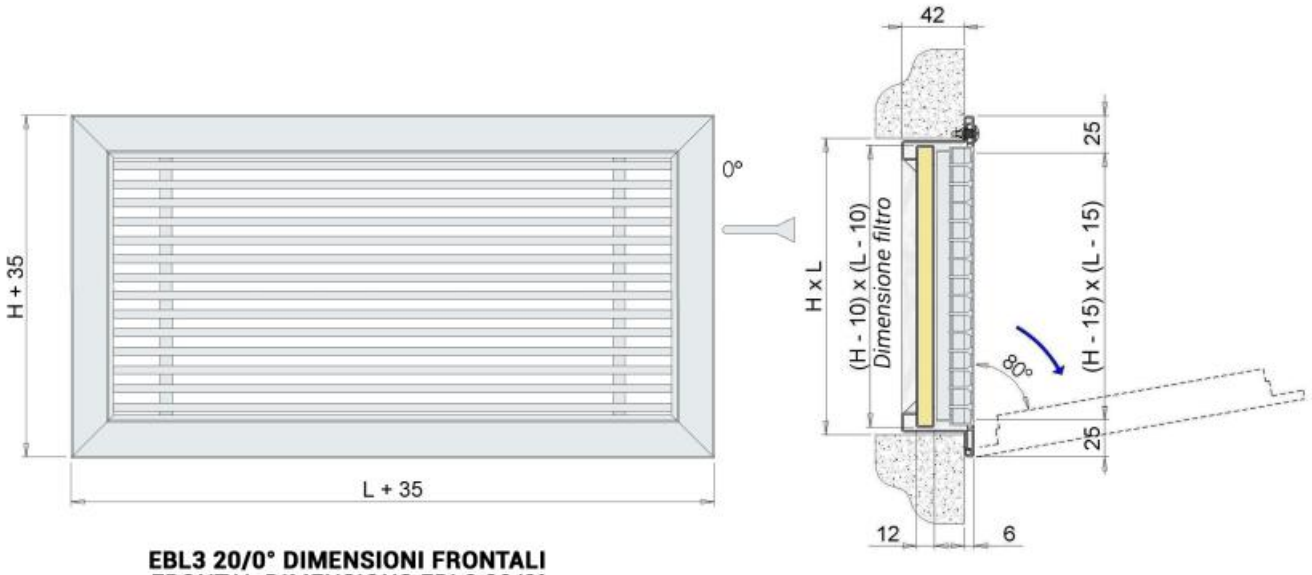

EBL3 20/0° DIMENSIONI FRONTALI
FRONTAL DIMENSIONS EBL3 20/0°

Effective cross-section

All dimensions are expressed in mm.

H	L				
	400	500	600	800	1000
	effective cross-section of the grille m²				
150	0,031	0,039	0047	0,064	0,080
200	0,042	0,053	0,064	0,086	0,108
300	0,063	0,079	0,097	0,130	0,164

Operating data

m^3/h: flow rate
Pa: pressure drops in Pascal
dB(A): noise level
V: face velocity on the filter (m/s)

An air velocity on the filter of 1.5 m/s is recommended to contain pressure drops and maintain filtration efficiency; the flow rate data in the table refers to the grille with the filter.

All dimensions are expressed in mm

H	V m/s	L				
		400	500	600	800	1000
	Face velocity on the filter	air flow rate m^3/h				
150	1,5	324	405	486	648	810
	2	432	540	648	864	1080
200	1,5	400	505	605	810	1015
	2	535	670	805	1080	1355
300	1,5	610	765	925	1235	1550
	2	810	1025	1230	1650	2065

Noise level dB(A)

V m/s	dB(A)
1,5	32/38
2	39/45

Pressure drop (Pa)

V m/s	Pa
1,5	35/38
2	62/68

Plenum box for EBL3 20/0°

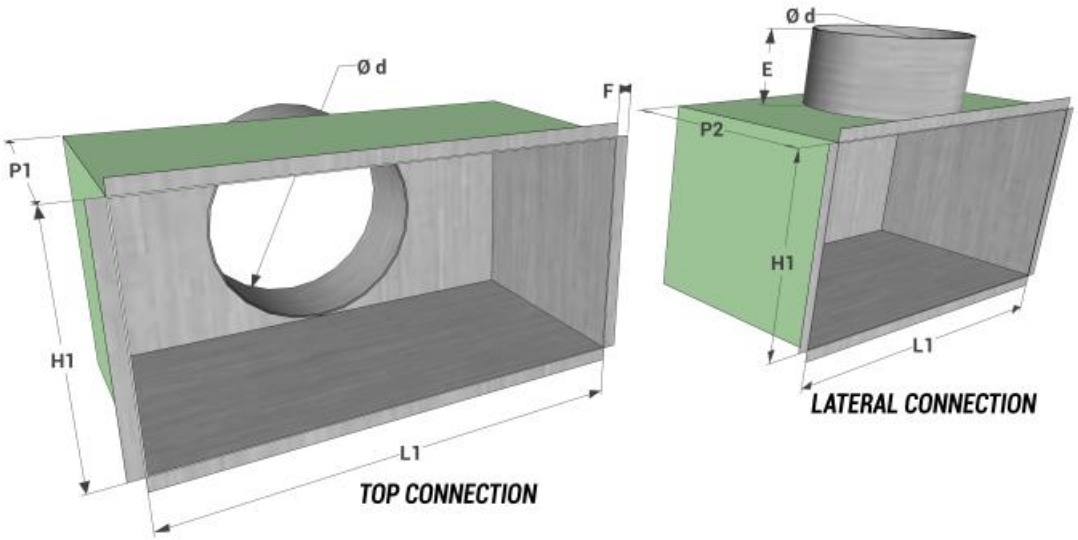

model L1 x H1	top connection			lateral connection			E	F
	P1	no. connections	Ø d	P2	no. connections	Ø d		
400x150	200	1	148	250	1	148	80	12
500x150	200	2	148	250	2	148	80	12
600x150	200	2	148	250	2	148	80	12
800x150	200	2	148	250	2	148	80	12
1000x150	200	3	148	250	3	148	80	12
400x200	200	1	198	300	1	198	80	12
500x200	200	1	198	300	1	198	80	12
600x200	200	2	198	300	2	198	80	12
800x200	200	2	198	300	2	198	80	12
1000x200	200	2	198	300	2	198	80	12
400x300	200	1	248	350	1	248	80	12
500x300	200	1	248	350	1	248	80	12
600x300	200	2	198	350	2	248	80	12
800x300	200	2	248	350	2	248	80	12
1000x300	200	2	248	350	2	248	80	12

Price list

dimensions	EBL3 20/0° painted white RAL9016	top connection		lateral connection	
		EPZ galvanized plenum	EPI isolated plenum	EPZ galvanized plenum	EPI isolated plenum
LxH	**euro**	**euro**	**euro**	**euro**	**euro**
400x150	⌄	⌄	⌄	⌄	⌄
500x150	⌄	⌄	⌄	⌄	⌄
600x150	⌄	⌄	⌄	⌄	⌄
800x150	⌄	⌄	⌄	⌄	⌄
1000x150	⌄	⌄	⌄	⌄	⌄
400x200	⌄	⌄	⌄	⌄	⌄
500x200	⌄	⌄	⌄	⌄	⌄
600x200	⌄	⌄	⌄	⌄	⌄
800x200	⌄	⌄	⌄	⌄	⌄
1000x200	⌄	⌄	⌄	⌄	⌄
400x300	⌄	⌄	⌄	⌄	⌄
500x300	⌄	⌄	⌄	⌄	⌄
600x300	⌄	⌄	⌄	⌄	⌄
800x300	⌄	⌄	⌄	⌄	⌄
1000x300	⌄	⌄	⌄	⌄	artDS1701232