CT Counter-frame for air jets and grilles



Description

Galvanised steel counter-frames for air jets and grilles.
The counter-frames are equipped with special brackets that are bent during installation to anchor them to the walls.

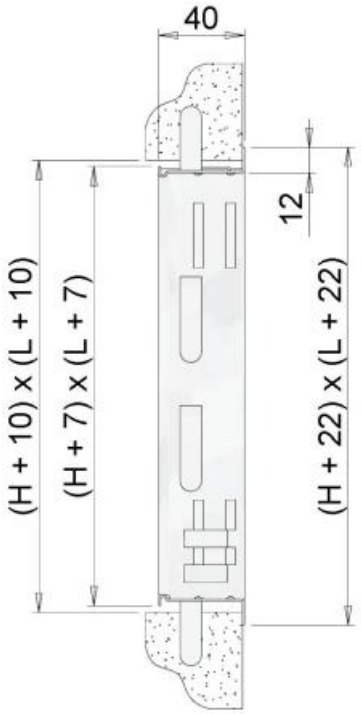

Use

Accessory compatible with EDC series diffusers, EBA - EBV - EBL series air jets and EGA - EGQ - EGF series grilles.

Notes

The frame is supplied disassembled and must be assembled on site.

Assembly detail:

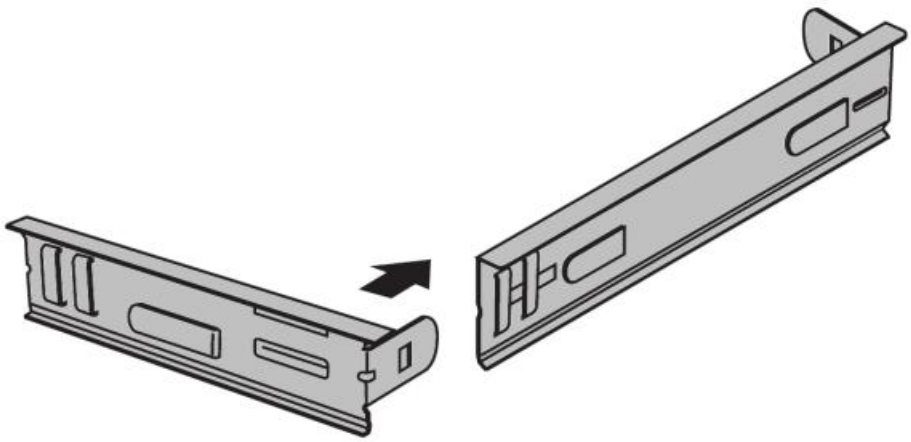

Price list

CT counter-frame										
H	L									
	200	300	400	500	600	700	800	900	1000	1200
	euro	euro	euro	euro	euro	euro	euro	euro	euro	euro
100	15,12	15,12	16,79	18,47	20,19	22,20	24,19	a.r.	27,59	36,97
150	15,12	16,79	18,47	22,16	24,19	25,80	27,59	a.r.	31,31	a.r.
200	16,79	18,47	21,35	24,19	25,91	28,64	31,31	a.r.	34,92	40,33
300	18,47	22,16	25,91	29,57	31,31	34,16	36,97	a.r.	42,05	45,71
400	21,35	25,91	29,57	32,97	36,97	39,52	42,05	a.r.	47,69	51,05
500	24,19	29,57	32,97	36,97	40,33	43,20	46,09	a.r.	51,48	56,86
600	25,91	31,31	36,97	40,33	44,03	46,72	49,40	a.r.	57,13	62,21
800	31,31	36,97	42,05	46,09	49,40	a.r.	57,13	a.r.	64,21	71,22
1000	34,92	42,05	47,69	51,48	57,13	artDG03009005	64,21	a.r.	80,29	a.r.