EBL3 20/0° Linear grilles with horizontal fixed bars with filter



Description

Aluminium exhaust grilles with fixed horizontal blades with 0° deflection, with the insertion of a special profile or counter-frame that allows for a flat filter for coarse and fine dust to be housed.

Characteristics

Material: aluminium.
Finish: painted RAL9016.
Filter: COARSE class (G2) thickness 12 mm.

Installation

Installation is carried out by opening the special brackets in the counter-frame or, alternatively, by securing the latter to the wall or duct using screws.

Use

For external or indoor air exhaust where dust pre-filtration is recommended.
Initial pressure drop lower than 40 Pa with 1.5 m/s speed on the filter.

Models

EBL3 20/0°: grille with special counter-frame secured with a hinge to the grille frame to allow for easy filter maintenance. Closing by means of a screw mechanism.

Accessories

- EPZ galvanised plenum;
- EPI insulated plenum.

On request

Fastening with magnet or knob.

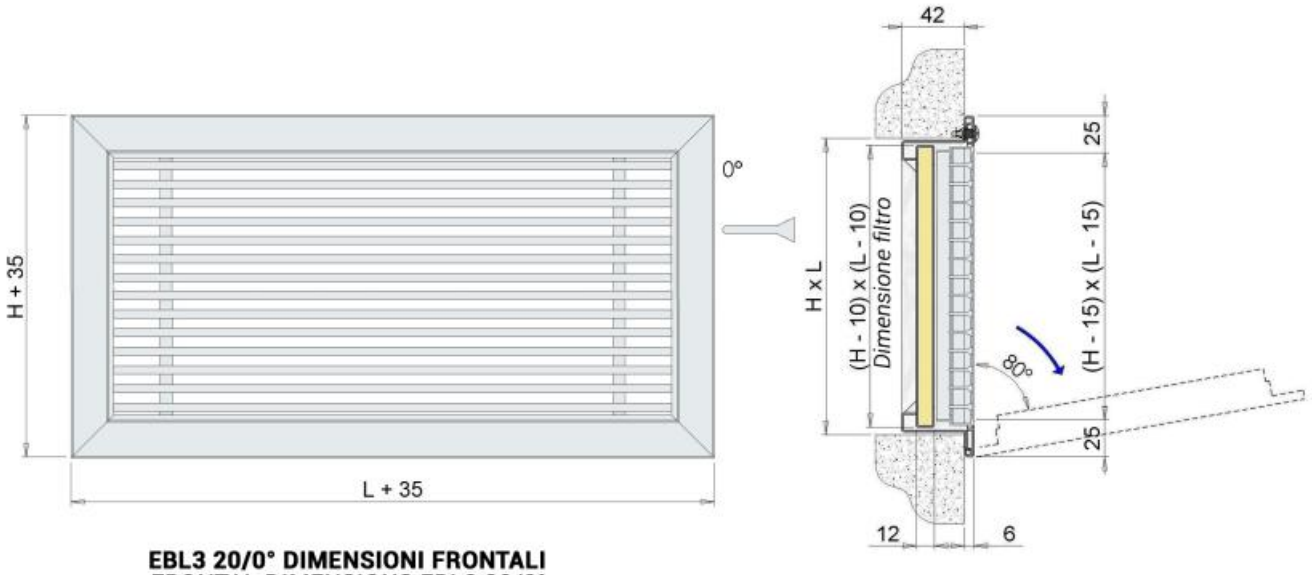

EBL3 20/0° DIMENSIONI FRONTALI
FRONTAL DIMENSIONS EBL3 20/0°

Effective cross-section

All dimensions are expressed in mm.

H	L				
	400	500	600	800	1000
	effective cross-section of the grille m²				
150	0,031	0,039	0047	0,064	0,080
200	0,042	0,053	0,064	0,086	0,108
300	0,063	0,079	0,097	0,130	0,164

Operating data

m^3/h: flow rate
Pa: pressure drops in Pascal
dB(A): noise level
V: face velocity on the filter (m/s)

An air velocity on the filter of 1.5 m/s is recommended to contain pressure drops and maintain filtration efficiency; the flow rate data in the table refers to the grille with the filter.

All dimensions are expressed in mm

H	V m/s	L				
		400	500	600	800	1000
	Face velocity on the filter	air flow rate m^3/h				
150	1,5	324	405	486	648	810
	2	432	540	648	864	1080
200	1,5	400	505	605	810	1015
	2	535	670	805	1080	1355
300	1,5	610	765	925	1235	1550
	2	810	1025	1230	1650	2065

Noise level dB(A)

V m/s	dB(A)
1,5	32/38
2	39/45

Pressure drop (Pa)

V m/s	Pa
1,5	35/38
2	62/68

Plenum box for EBL3 20/0°

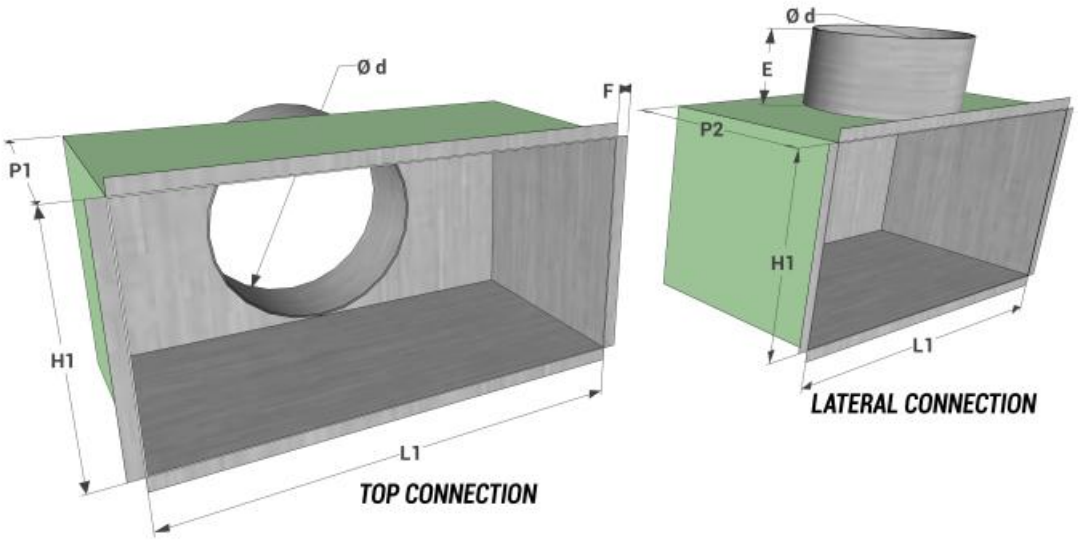

model L1 x H1	top connection			lateral connection			E	F
	P1	no. connections	Ø d	P2	no. connections	Ø d		
400x150	200	1	148	250	1	148	80	12
500x150	200	2	148	250	2	148	80	12
600x150	200	2	148	250	2	148	80	12
800x150	200	2	148	250	2	148	80	12
1000x150	200	3	148	250	3	148	80	12
400x200	200	1	198	300	1	198	80	12
500x200	200	1	198	300	1	198	80	12
600x200	200	2	198	300	2	198	80	12
800x200	200	2	198	300	2	198	80	12
1000x200	200	2	198	300	2	198	80	12
400x300	200	1	248	350	1	248	80	12
500x300	200	1	248	350	1	248	80	12
600x300	200	2	198	350	2	248	80	12
800x300	200	2	248	350	2	248	80	12
1000x300	200	2	248	350	2	248	80	12

Price list

dimensions	EBL3 20/0° painted white RAL9016	top connection		lateral connection	
		EPZ galvanized plenum	EPI isolated plenum	EPZ galvanized plenum	EPI isolated plenum
LxH	**euro**	**euro**	**euro**	**euro**	**euro**
400x150	126,01	a.r.	a.r.	a.r.	a.r.
500x150	139,95	a.r.	a.r.	a.r.	a.r.
600x150	144,05	a.r.	a.r.	a.r.	a.r.
800x150	172,44	a.r.	a.r.	a.r.	a.r.
1000x150	211,73	a.r.	a.r.	a.r.	a.r.
400x200	144,99	a.r.	a.r.	a.r.	a.r.
500x200	168,97	a.r.	a.r.	a.r.	a.r.
600x200	167,50	a.r.	a.r.	a.r.	a.r.
800x200	193,63	a.r.	a.r.	a.r.	a.r.
1000x200	244,02	a.r.	a.r.	a.r.	a.r.
400x300	183,62	a.r.	a.r.	a.r.	a.r.
500x300	177,65	a.r.	a.r.	a.r.	a.r.
600x300	202,92	a.r.	a.r.	a.r.	a.r.
800x300	251,88	a.r.	a.r.	a.r.	a.r.
1000x300	310,12	a.r.	a.r.	a.r.	artDS1701232