EDLS-EDLSB Hidden multi-slot linear diffusers



Description

Hidden linear diffuser with single or multi slots, width 20 or 30 mm, with aluminium aerodynamic profile and adjustable deflectors for optimal air throw control.
Also available with equalizer and sliding damper.

Features

Material: aluminium;
EDLS finish: RAL9005 black painted aluminium;
EDLsB finish: RAL9016 white painted aluminium;
Slots number: from 1 to 3;
Slots width: 20 or 30 mm;

Installation: by plenum box with mounting bridge, ceiling finishing with anti-crack tape on the frame and subsequent plaster skimming.

Possible dimensions in one piece:
- Minimum length 300 mm:
- Maximum length 2000 mm;

Use

Diffuser suitable for both air supply and exhaust in large rooms. Its modularity allows great freedom of design.

Models

-EDLS10-FA - EDLSB10-FA hidden linear diffusers 20 mm slot without deflectors (exhaust).
-EDLS20-FA - EDLSB20-FA hidden linear diffusers 20 mm slot with deflectors (supply).
-EDLS30-FA - EDLSB30-FA hidden linear diffusers 20 mm slot without deflectors, with sliding damper (exhaust).
-EDLS40-FA - EDLSB40-FA hidden linear diffusers 20 mm slot with deflectors and sliding damper (supply).
-EDLS10-FB - EDLSB10-FB hidden linear diffusers 30 mm slot without deflectors (exhaust).
-EDLS20-FB - EDLSB20-FB hidden linear diffusers 30 mm slot with deflectors (supply).
-EDLS30-FB - EDLSB30-FB hidden linear diffusers 30 mm slot without deflectors, with sliding damper (exhaust).
-EDLS40-FB - EDLSB40-FB hidden linear diffusers 30 mm slot with deflectors and sliding damper (supply).

Accessories

-galvanized plenum box;
-insulated plenum box;
-mounting bridge;
-continues line kit.

On demand

-Possibility of installation in continuity;
-Plenum box with ovalised rear connection.

EDSH - EDLSB one slot dimensions

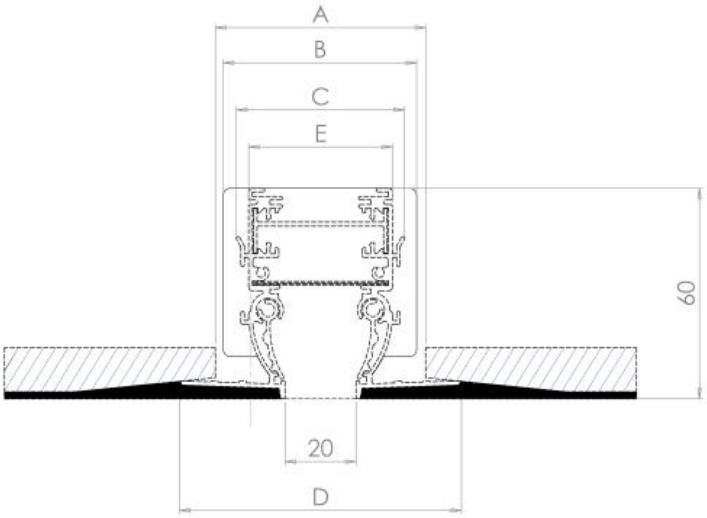

EDLS-FA 1 slot 20 mm
EDLSB-FA 1 slot 20 mm

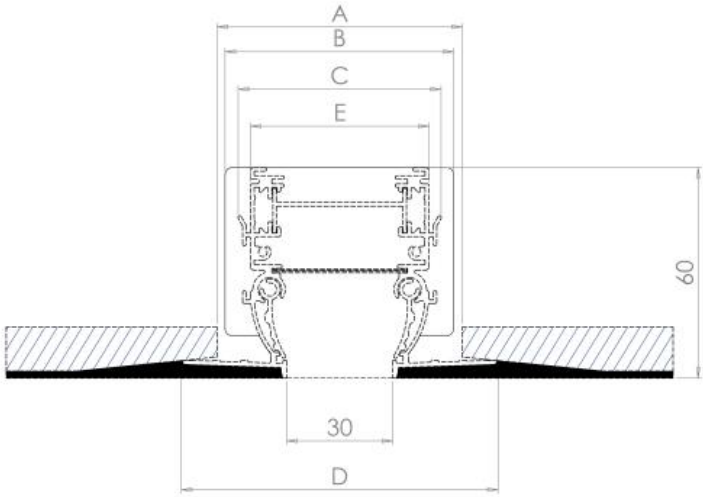

EDLS-FB 1 slot 30 mm
EDLSB-FB 1 slot 30 mm

All dimensions are expressed in mm

Slot	L	A	B	C	E	D	number of fixing brackets
20 mm slot	800	60	55	48	41	80	2
	1000						2
	1200						2
	1500						2
	2000						2
30 mm slot	800	70	65	58	51	90	2
	1000						2
	1200						2
	1500						2
	2000						2

EDLS - EDLSB two slot dimensions

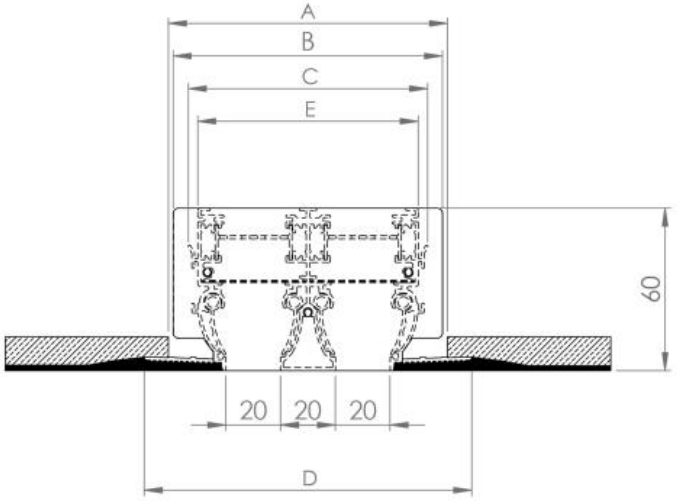

EDLS-FA 2 slots 20 mm
EDLSB-FA 2 slots 20 mm

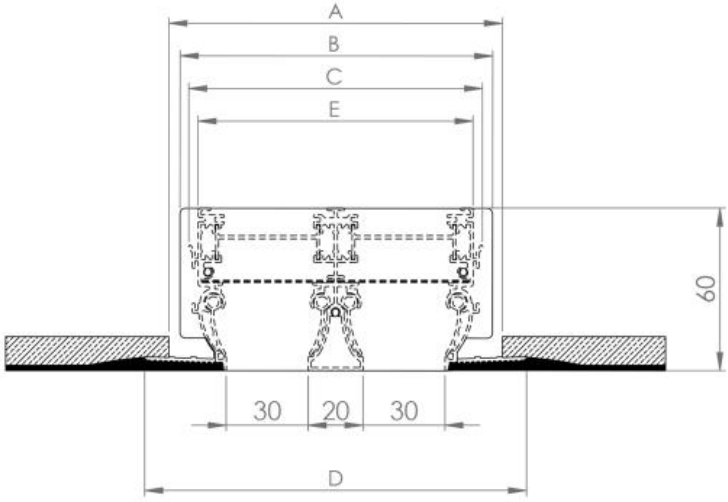

EDLS-FB 2 slots 30 mm
EDLSB-FB 2 slots 30 mm

Two slots	L	A	B	C	D	E	number of fixing brackets
20 mm slots	800	100	95	88	120	81	2
	1000						2
	1200						2
	1500						2
	2000						2
30 mm slots	800	120	115	108	140	101	2
	1000						2
	1200						2
	1500						2
	2000						2

EDLS - EDLSB three slot dimensions

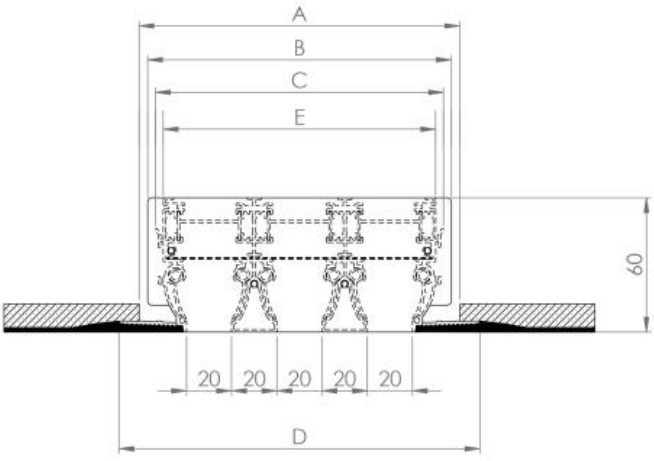

EDLS-FA 3 slots 20 mm
EDLSB-FA 3 slots 20 mm

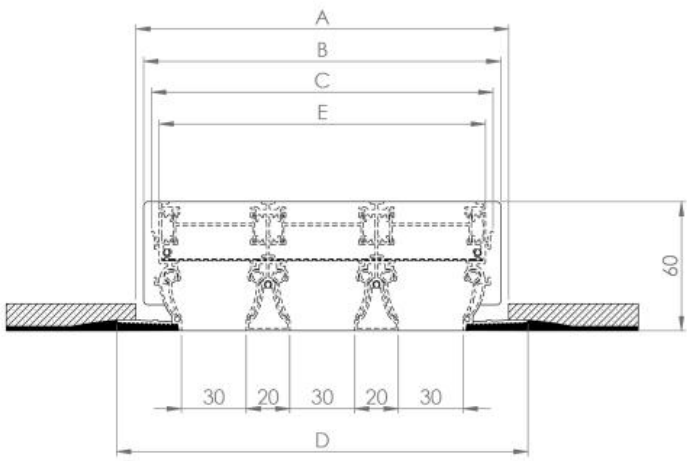

EDLS-FB 3 slots 30 mm
EDLSB-FB 3 slots 30 mm

three slots	L	A	B	C	D	E	number of fixing brackets
20 mm slots	800	140	135	128	160	121	2
	1000						2
	1200						2
	1500						2
	2000						3
30 mm slots	800	170	165	158	190	151	2
	1000						2
	1200						2
	1500						2
	2000						3

Operating data

Data referring to 1m long diffusers, with a terminal throw speed Vt=0.25 m/s, in ceiling installations and with lateral launch with coanda effect.

Data referring to diffusers without damper or with open sliding damper.
Data referring to diffusers with deflectors in the working position with a 50% reduction of the air passage surface.

The position of the deflectors reduces the effective cross-section. When the deflectors are fully open, or when the diffuser is used for exhaust air, the flow rates (expressed in m^3/h) indicated in the table can change.

Vk: effective speed (m/s) m^3/h: air flow rate
Pa: pressure drops in Pascal
L(m): air throw in meters
dB(A): noise level

slots	slot dimension	effective cross-section m^2	Air flow and throw						
1 slot	20 mm slot	0,0097	m^3/h	70	105	140	175	210	245
			L(m)	1.8	2.7	3.6	4.5	5.4	6.3
	30 mm slot	0,0146	m^3/h	105	158	210	262	315	368
			L(m)	1,6	2,5	3,4	4,2	5	5,8
		noise level	dB(A)	<20	22	32	37	44	48
2 slots	20 mm slot	0,0194	m^3/h	140	210	280	350	420	490
			L(m)	2,6	3,9	5,1	6,4	7,7	9,0
	f30 mm slot	0,0292	m^3/h	210	316	420	524	630	736
			L(m)	2,3	3,6	4,9	6,0	7,1	8,3
		noise level	dB(A)	<20	24	34	39	46	50
3 slots	20 mm slot	0,0291	m^3/h	210	315	420	525	630	735
			L(m)	3,9	5,8	7,7	9,6	11,6	13,5
	30 mm slot	0,0438	m^3/h	315	474	630	786	945	1104
			L(m)	3,4	5,4	7,3	9,0	10,7	12,4
		noise level	dB(A)	<20	26	36	41	48	52
Vk			m/s	2	3	4	5	6	7
pressure drops			Pa	7	15	26	41	59	80

Corner connection

Aesthetic connecting element between the two linear diffuser lines with a 90° angle and 500 mm length on each side. It has no ventilation features.

All measurements are expressed in mm.

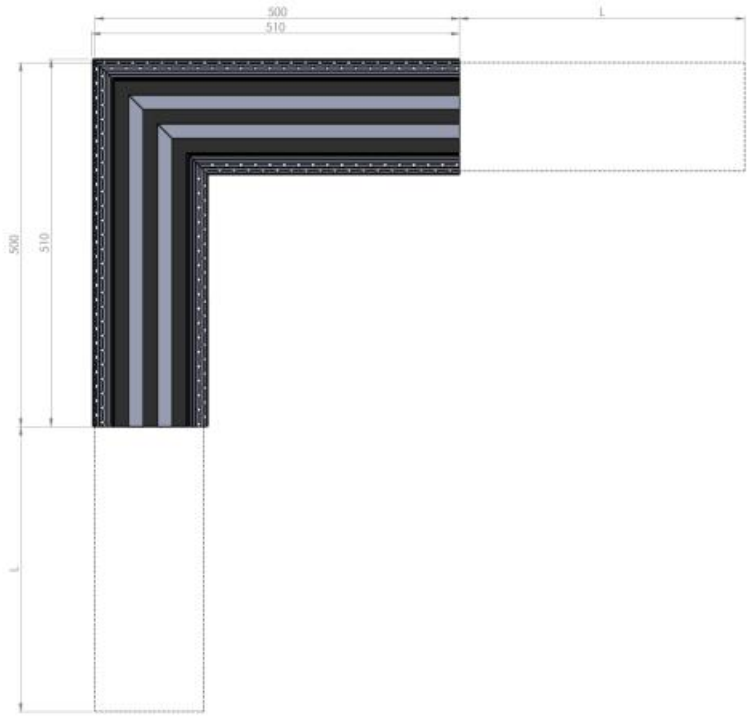

Continuity kit

The continuity kit is an accessory required to create continuous lines of linear diffusers longer than 2 metres. It is made up of two junction plates that allow for the alignment and connection of two components of the line.

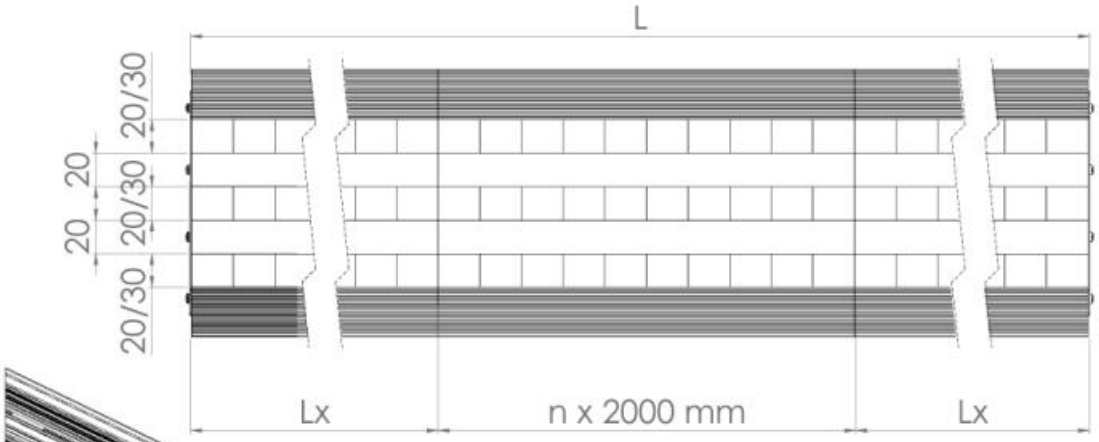

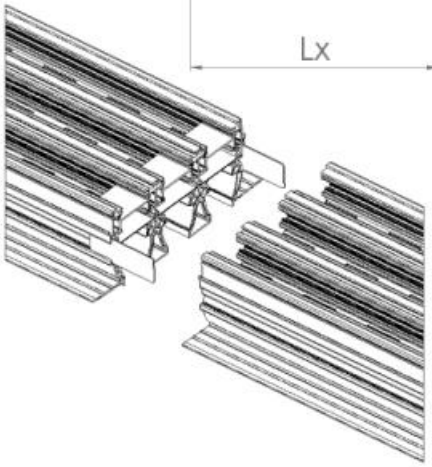

Air throw characteristics

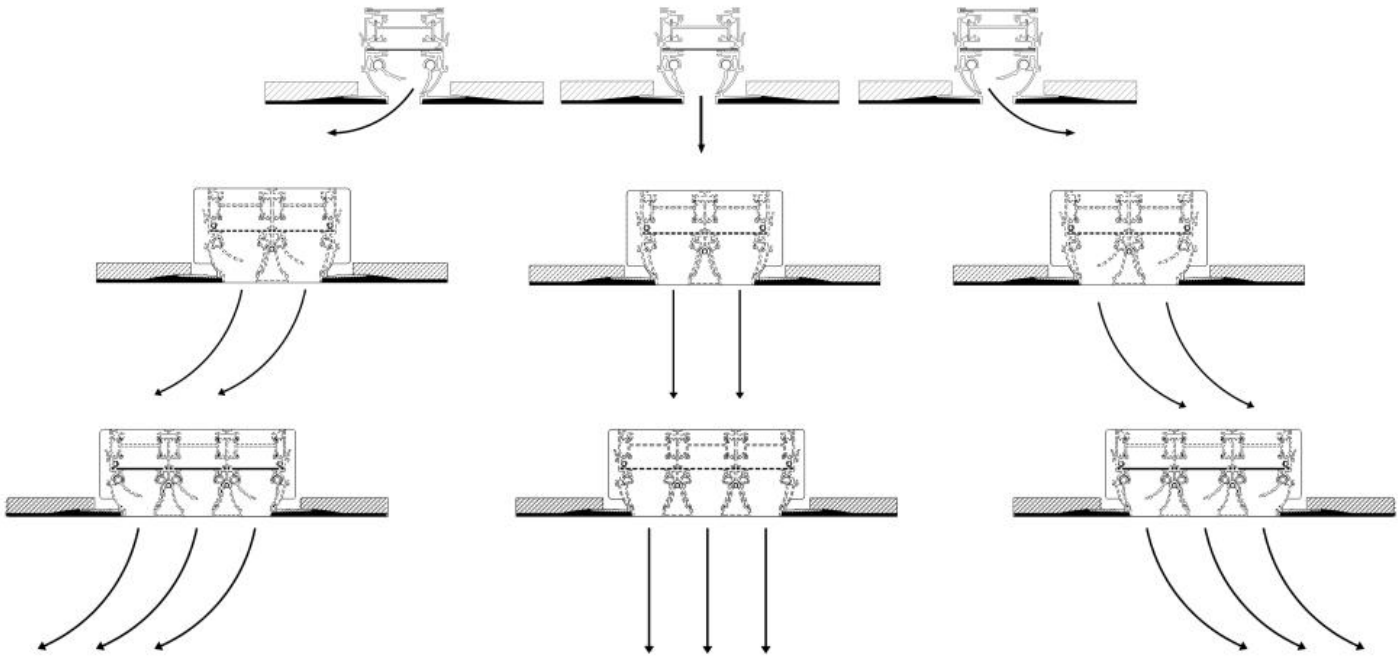

Plenum dimensions and fixing bracket system

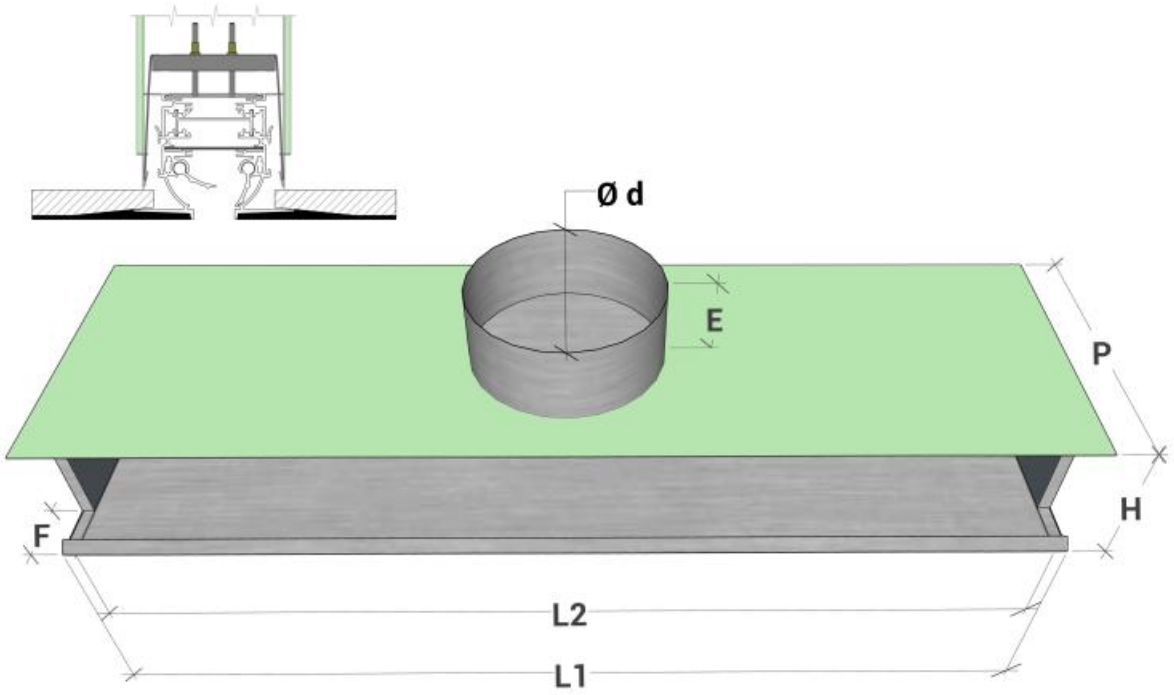

1 SLOT	L	Plenum dimensions							
		L1	L2	No. of connections	Ø d	P	H	E	F
20 mm slot	800	800	770	1	145	240	65	80	49
	1000	1000	970	1					
	1200	1200	1170	2					
	1500	1500	1470	2					
	2000	2000	1970	2					
30 mm slot	800	800	770	1	145	240	75	80	49
	1000	1000	970	1					
	1200	1200	1170	2					
	1500	1500	1470	2					
	2000	2000	1970	2					

2 SLOTS	L	Plenum dimensions							
		L1	L2	No. of connections	Ø d	P	H	E	F
20 mm slot	800	800	770	2	145	300	105	80	49
	1000	1000	970	2					
	1200	1200	1170	2					
	1500	1500	1470	2					
	2000	2000	1970	2					
20 mm slot	800	800	770	2	198	300	125	80	49
	1000	1000	970	2					
	1200	1200	1170	2					
	1500	1500	1470	2					
	2000	2000	1970	2					

3 SLOTS	L	Plenum dimensions							
		L1	L2	No. of connections	Ø d	P	H	E	F
20 mm slot	800	800	770	2	198	300	145	80	49
	1000	1000	970	2					
	1200	1200	1170	2					
	1500	1500	1470	2					
	2000	2000	1970	2					
30 mm slot	800	800	770	2	198	300	165	80	49
	1000	1000	970	2					
	1200	1200	1170	2					
	1500	1500	1470	2					
	2000	2000	1970	2					

Price list for EDLS-FA - 1 slot - black RAL9005 - 20 mm slot

EDLS-FA	lenght	EDLS10-FA	EDLS20-FA	EDLS30-FA	EDLS40-FA	PLENUM	INSULATED PLENUM
1 SLOT		euro	euro	euro	euro	euro	euro
20 mm slot	800	53,99	56,54	63,48	70,36	a.r.	a.r.
	1000	60,66	63,65	70,50	78,46	a.r.	a.r.
	1200	72,04	76,94	85,77	94,04	a.r.	a.r.
	1500	82,00	87,99	96,26	106,28	a.r.	a.r.
	2000	104,42	108,20	123,23	135,09	a.r.	a.r.

Price list for EDLS-FA - 2 slot - black RAL9005 - 20 mm slots

EDLS-FA	lenght	EDLS10-FA	EDLS20-FA	EDLS30-FA	EDLS40-FA	PLENUM	INSULATED PLENUM
2 SLOT		euro	euro	euro	euro	euro	euro
20 mm slot	800	94,35	101,40	111,47	126,38	72,78	95,99
	1000	105,32	113,65	123,44	140,72	78,53	102,79
	1200	124,39	136,88	150,00	168,67	90,16	119,48
	1500	140,85	165,97	167,26	189,98	94,28	130,27
	2000	178,93	216,03	214,13	241,62	107,98	152,86

Price list for EDLS-FA - 3 slot - black RAL9005 - 20 mm slots

EDLS-FA	lenght	EDLS10-FA	EDLS20-FA	EDLS30-FA	EDLS40-FA	PLENUM	INSULATED PLENUM
3 SLOT		euro	euro	euro	euro	euro	euro
20 mm slot	800	123,64	136,07	146,93	170,10	78,14	101,77
	1000	138,23	152,66	163,12	189,81	85,05	111,26
	1200	164,21	184,74	200,04	229,02	97,00	130,06
	1500	185,98	224,06	222,81	257,81	103,23	143,33
	2000	237,53	292,75	286,73	329,25	119,69	170,16

Price list for EDLS -FB - 1 slot - black RAL9005 - 30 mm slot

EDLS-FB	lenght	EDLS10-FB	EDLS20-FB	EDLS30-FB	EDLS40-FB	PLENUM	INSULATED PLENUM
1 SLOT		euro	euro	euro	euro	euro	euro
30 mm slot	800	55,06	61,27	64,75	71,77	a.r.	a.r.
	1000	61,86	68,31	71,91	80,02	a.r.	a.r.
	1200	79,25	86,84	94,34	103,46	a.r.	a.r.
	1500	90,21	98,13	105,88	116,89	a.r.	a.r.
	2000	106,50	117,60	125,68	137,78	a.r.	a.r.

Price list for EDLS -FB - 2 slot - black RAL9005 - 30 mm slots

EDLS-FB	lenght	EDLS10-FB	EDLS20-FB	EDLS30-FB	EDLS40-FB	PLENUM	INSULATED PLENUM
2 Slots		euro	euro	euro	euro	euro	euro
30 mm slots	800	100,96	108,48	119,26	135,22	70,62	96,97
	1000	112,69	121,60	132,06	150,56	77,73	107,07
	1200	133,10	146,46	160,48	180,46	99,48	132,30
	1500	150,71	177,58	178,96	203,27	105,11	145,01
	2000	191,44	231,14	229,11	258,52	122,05	170,98

Price list for EDLS -FB - 3 slot - black RAL9005 - 30 mm slots

EDLS-FB	lenght	EDLS10-FB	EDLS20-FB	EDLS30-FB	EDLS40-FB	PLENUM	INSULATED PLENUM
3 slots		euro	euro	euro	euro	euro	euro
30 mm slots	800	132,28	145,59	157,21	182,00	79,41	104,01
	1000	147,89	163,33	174,53	203,08	86,53	113,17
	1200	175,69	197,67	214,03	245,03	99,48	132,30
	1500	198,99	239,74	238,40	275,84	105,11	145,54
	2000	254,14	313,22	306,79	352,29	122,05	173,01

Price list for EDLSB-FA - 1 slot - white RAL9016 - 20 mm slot

EDLSB-FA	lenght	EDLSB10-FA	EDLSB20-FA	EDLSB30-FA	EDLSB40-FA	PLENUM	INSULATED PLENUM
1 SLOT		euro	euro	euro	euro	euro	euro
20 mm slot	800	53,99	56,54	63,48	70,36	a.r.	a.r.
	1000	60,66	63,65	70,50	78,46	a.r.	a.r.
	1200	72,04	76,94	85,77	94,04	a.r.	a.r.
	1500	82,00	87,99	96,26	106,28	a.r.	a.r.
	2000	104,42	108,20	123,23	135,09	a.r.	a.r.

Price list for EDLSB-FA - 2 slot - white RAL9016 - 20 mm slots

EDLSB-FA	lenght	EDLSB10-FA	EDLSB20-FA	EDLSB30-FA	EDLSB40-FA	PLENUM	INSULATED PLENUM
2 slots		euro	euro	euro	euro	euro	euro
30 mm slots	800	94,35	101,40	111,47	126,38	72,78	95,99
	1000	105,32	113,65	123,44	140,72	78,53	102,79
	1200	124,39	136,88	150,00	168,67	90,16	119,48
	1500	140,85	165,97	167,26	189,98	94,28	130,27
	2000	178,93	216,03	214,13	241,62	107,98	152,86

Price list for EDLSB-FA - 3 slot - white RAL9016 - 20 mm slots

EDLSB-FA	lenght	EDLSB10-FA	EDLSB20-FA	EDLSB30-FA	EDLSB40-FA	PLENUM	INSULATED PLENUM
3 slots		euro	euro	euro	euro	euro	euro
30 mm slots	800	123,64	136,07	146,93	170,10	78,14	101,77
	1000	138,23	152,66	163,12	189,81	85,05	111,26
	1200	164,21	184,74	200,04	229,02	97,00	130,06
	1500	185,98	224,06	222,81	257,81	103,23	143,33
	2000	237,53	292,75	286,73	329,25	119,69	170,16

Price list for EDLSB -FB - 1 slot - white RAL9016 - 30 mm slot

EDLSB-FB	lenght	EDLSB10-FB	EDLSB20-FB	EDLSB30-FB	EDLSB40-FB	PLENUM	INSULATED PLENUM
1 SLOT		euro	euro	euro	euro	euro	euro
30 mm slot	800	55,06	61,27	64,75	71,77	a.r.	a.r.
	1000	61,86	68,31	71,91	80,02	a.r.	a.r.
	1200	79,25	86,84	94,34	103,46	a.r.	a.r.
	1500	90,21	98,13	105,88	116,89	a.r.	a.r.
	2000	106,50	117,60	125,68	137,78	a.r.	a.r.

Price list for EDLSB-FB - 2 slot - white RAL9016 - 30 mm slots

EDLSB-FB	lenght	EDLSB10-FB	EDLSB20-FB	EDLSB30-FB	EDLSB40-FB	PLENUM	INSULATED PLENUM
2 slots		euro	euro	euro	euro	euro	euro
30 mm slots	800	100,96	108,48	119,26	135,22	70,62	96,97
	1000	112,69	121,60	132,06	150,56	77,73	107,07
	1200	133,10	146,46	160,48	180,46	99,48	132,30
	1500	150,71	177,58	178,96	203,27	105,11	145,01
	2000	191,44	231,14	229,11	258,52	122,05	170,98

Price list for EDLSB-FB - 3 slot - white RAL9016 - 30 mm slots

EDLSB-FB	lenght	EDLSB10-FB	EDLSB20-FB	EDLSB30-FB	EDLSB40-FB	PLENUM	INSULATED PLENUM
3 slots		euro	euro	euro	euro	euro	euro
30 mm slots	800	132,28	145,59	157,21	182,00	79,41	104,01
	1000	147,89	163,33	174,53	203,08	86,53	113,17
	1200	175,69	197,67	214,03	245,03	99,48	132,30
	1500	198,99	239,74	238,40	275,84	105,11	145,54
	2000	254,14	313,22	306,79	352,29	122,05	173,01

Price list

Fixing brackets and Kit for continuos line	euro
fixing bracket for EDLS-FA EDLS-FB EDLSB-FA EDLSB-FB **- 1 SLOT**	12,72
fixing bracket for EDLS-FA EDLSB-FA**- 2 SLOTS**	12,72
fixing bracket for EDLS-FB EDLSB-FB**- 2 SLOTS**	12,72
fixing bracket for EDLS-FA EDLSB-FA**- 3 SLOTS**	12,72
fixing bracket for EDLS-FB EDLSB-FB**- 3 SLOTS**	12,72
continuity kit	2,39

Aesthetic corner price list

Angular without deflectors	EDLS-FA	EDLS-FB	EDLSB-FA	EDLSB-FB
	euro	euro	euro	euro
1 SLOT	121,34	123,73	121,34	123,73
2 SLOTS	210,65	225,38	210,65	225,38
3 SLOTS	276,46	295,78	276,46	295,78
continuity kit	2,39	2,39	2,39	2,39